Cambridge Assessment International Education

Cambridge IGCSE™

CANDIDATE NAME	

CENTRE NUMBER						CANDIDATE NUMBER				

4102878603

DESIGN & TECHNOLOGY **0445/42**

Paper 4 Systems & Control **May/June 2022**

1 hour

You must answer on the question paper.

No additional materials are needed.

INSTRUCTIONS

- Section A: answer **all** questions.
- Section B: answer **one** question.
- Use a black or dark blue pen. You may use an HB pencil for any diagrams or graphs.
- Write your name, centre number and candidate number in the boxes at the top of the page.
- Answer in the space provided.
- Do **not** use an erasable pen or correction fluid.
- Do **not** write on any bar codes.
- You may use a calculator.

INFORMATION

- The total mark for this paper is 50.
- The number of marks for each question or part question is shown in brackets [ ].
- All dimensions are in millimetres.

This document has **20** pages. Any blank pages are indicated.

DC (CE/CGW) 303086/1
© UCLES 2022

Section A

Answer **all** questions in this section.

1 Fig. 1.1 shows an adjustable height axle stand used to support the weight of a vehicle.

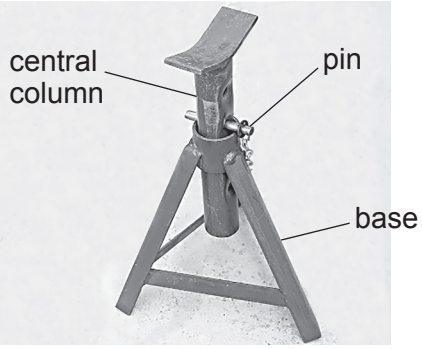

Fig. 1.1

(a) State **three** properties of mild steel that make it suitable for use in the base of the axle stand.

1 .....

2 .....

3 .....
[3]

(b) Describe the type of structure used in the base of the axle stand.

.....

.....

..... [2]

(c) The pin used to support the central column must resist shear force.
Use sketches and notes to describe what is meant by ‘shear force’.

[2]

2 **(a)** Give **two** reasons why a designer would need to reduce friction in a mechanism.

1 .....

.....

2 .....

.....
[2]

(b) State **two** methods that can be used to reduce friction in a mechanism.

1 .....

2 .....
[2]

3 Products can be designed and manufactured so that they can be disassembled.
Describe **two** benefits of being able to disassemble a product after manufacture.

1 .....

.....

2 .....

.....
[2]

4 Fig. 4.1 shows a clock that uses a mechanism to convert motion.

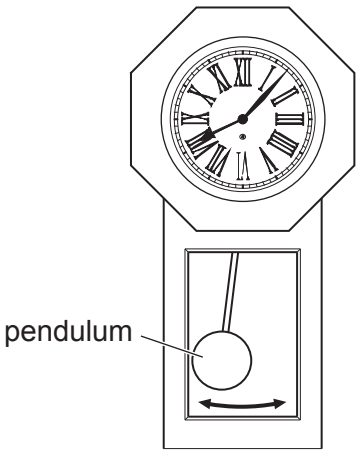

Fig. 4.1

(a) State the type of motion produced by the pendulum.

..... [1]

(b) State the type of motion produced by the clock hands.

..... [1]

5 Describe, using **one** example, how computers can be used by a manufacturer to increase efficiency in stock control.

.....

.....

.....

..... [3]

6 State the function of an electrical switch.

.....

..... [1]

7 **(a)** Name the two types of switch shown in Fig. 7.1.

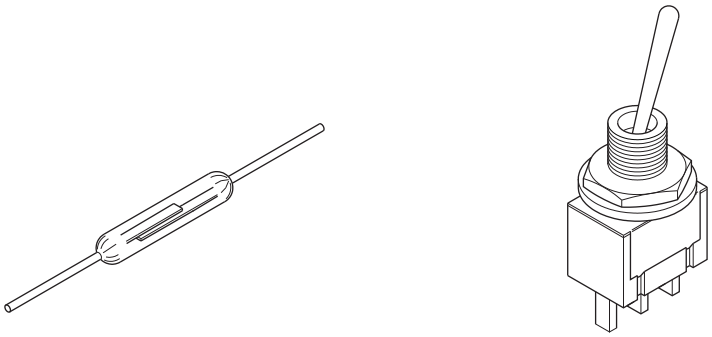

A **B**

Fig. 7.1

Switch **A** .....

Switch **B** .....
[2]

(b) Describe how switch **A** is operated.

.....

.....

..... [2]

8 Fig. 8.1 shows two methods of connecting switches in a circuit.

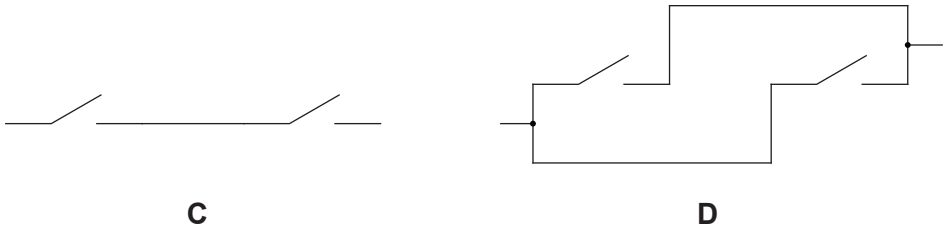

Fig. 8.1

Name each of the methods used.

Method **C** .....

Method **D** .....
[2]

Section B

Answer **one** question from this section.

9 Fig. 9.1 shows a wooden chair.

Fig. 9.1

(a) **(i)** State **three** forces that may affect the stability of the structure when a person sits on the chair.

1 .....

2 .....

3 .....

[3]

(ii) Fig. 9.2 shows the laminated top rails of the chair.

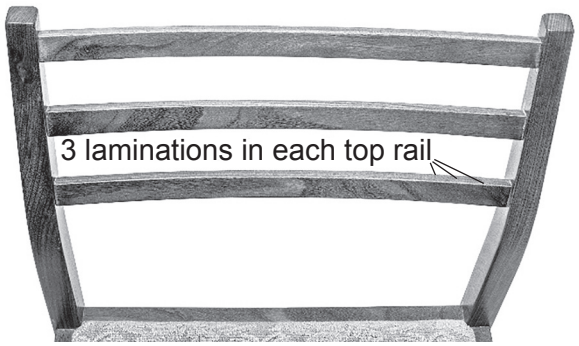

Fig. 9.2

Describe the benefits of using lamination to manufacture the top rails.

.....

.....

.....

.....

..... [3]

(b) Fig. 9.3 shows a joint that could be used in a frame construction.

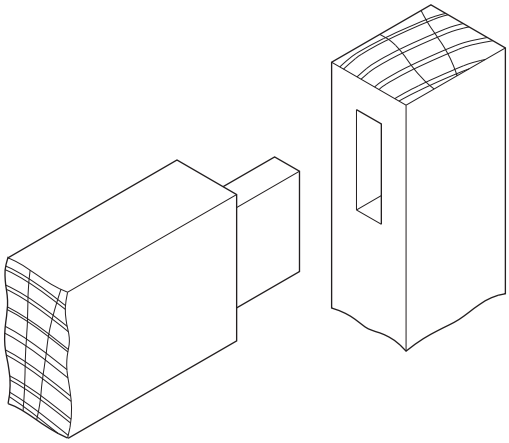

Fig. 9.3

(i) Give **one** benefit of cutting the joint using CAM technology.

.....

..... [1]

(ii) Give **one** benefit of cutting the joint using hand tools.

.....

..... [1]

(iii) The joint in Fig. 9.3 will be assembled using adhesive.
State **one** property that the adhesive will need.

..... [1]

(c) **(i)** Use sketches and notes to describe the differences between the following structural members.

beam **strut** **tie**

[6]

(ii) Suitable materials for structural members must be selected carefully.
Give **two** examples of defects that should be avoided when selecting wood to be used in structures.

1 .....

2 .....
[2]

(iii) Explain, using an example, how composite materials can be used to improve the performance of a structure.

.....

.....

.....

.....

..... [3]

(d) Fig. 9.4 shows a workshop hoist with a counterbalance weight.

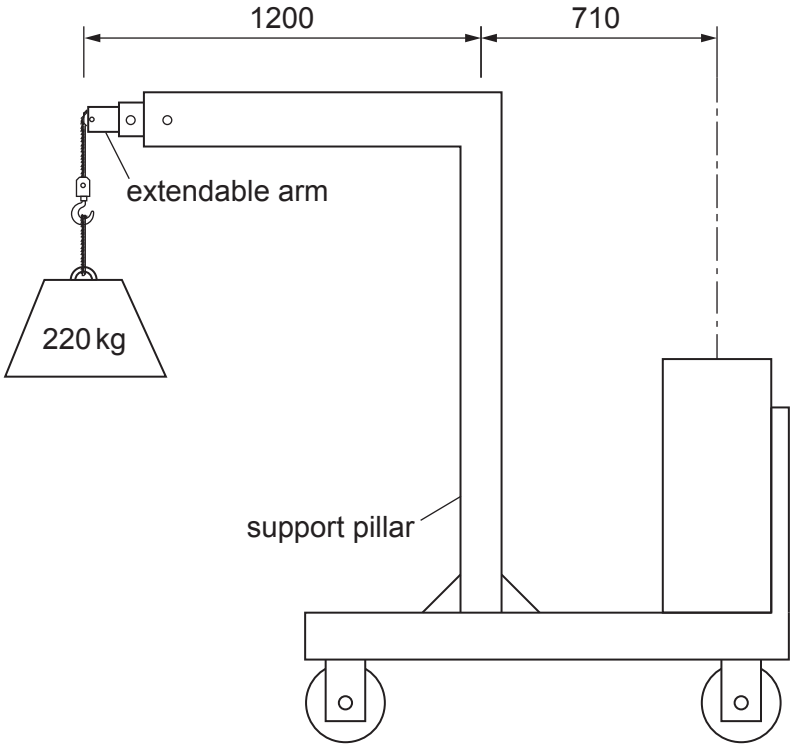

Fig. 9.4

(i) Label the counterbalance weight on Fig. 9.4. [1]

(ii) Calculate the weight of the counterbalance which will keep the workshop hoist structure in equilibrium while lifting the load, with the minimum stress on the structure.

.....

.....

.....

..... [2]

(iii) Describe the considerations that should be taken into account when calculating a Factor of Safety for the workshop hoist.

.....

.....

.....

..... [2]

10 Fig. 10.1 shows three methods of transmitting motion from one shaft to another.

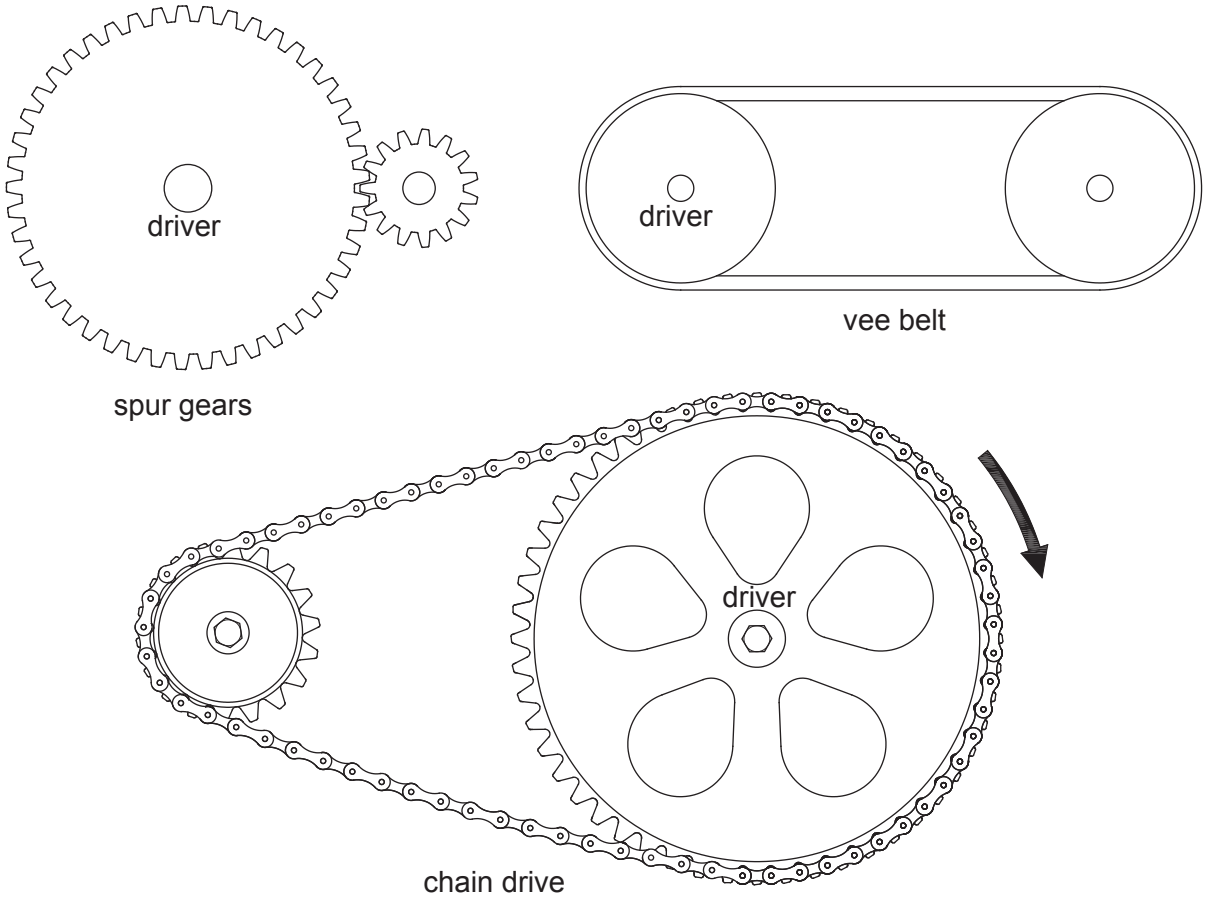

Fig. 10.1

(a) **(i)** Give **one** different benefit of each method.

spur gears .....

.....

vee belt .....

.....

chain drive .....

.....
[3]

(ii) Circle the area of the chain in Fig. 10.1 that is in tension during rotation in the direction shown. [1]

(iii) Fig. 10.2 shows a joining link which tightens under tension and is often used to join the ends of a chain together.

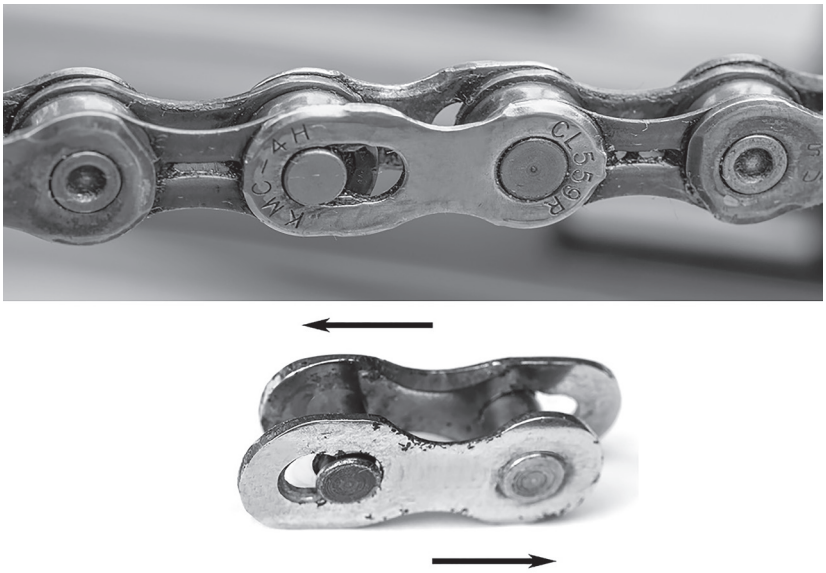

Fig. 10.2

Explain why it is better to use this link as a joining method rather than a rivet.

.....

.....

.....

..... [2]

(iv) Fig. 10.3 shows a toothed belt drive.

toothed belt

Fig. 10.3

State **one** advantage of a toothed belt compared to a vee belt.

.....

..... [1]

(b) Many machine drives use spur gears in the drive train.
Use sketches and notes to show a method of adjusting two spur gears to mesh correctly.

[4]

(c) Fig. 10.4 shows the drive components on a pillar drill.

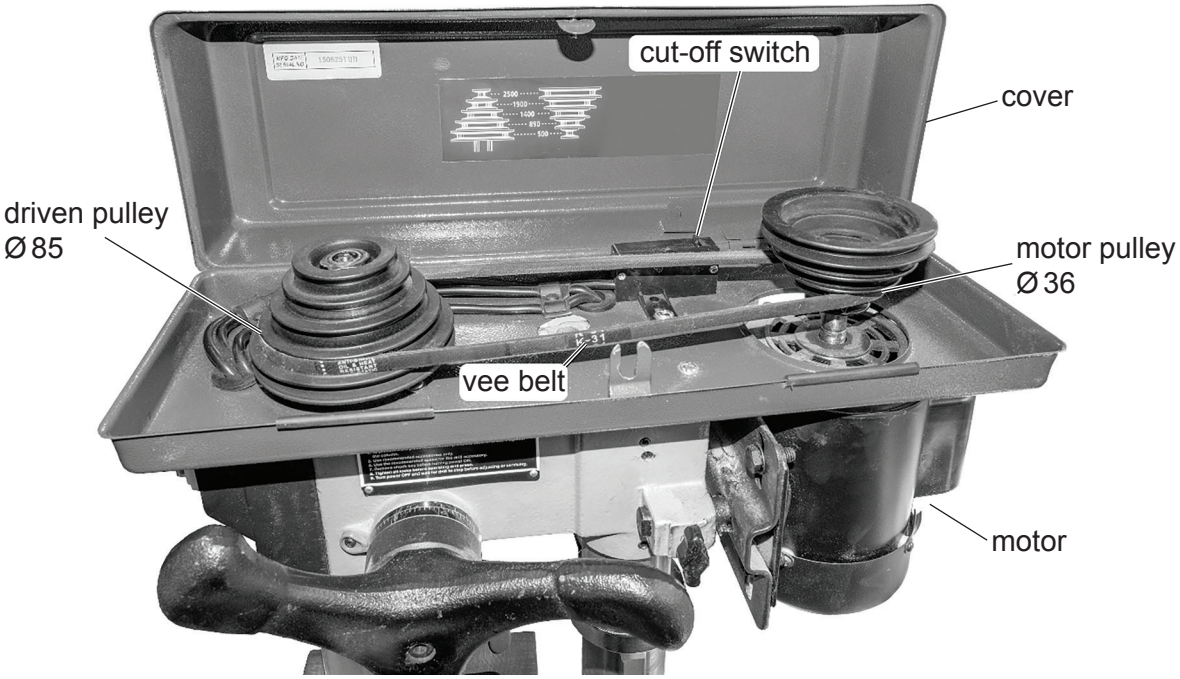

Fig. 10.4

(i) Give **two** reasons for using a cover over the belt and pulley system.

1 .....

2 .....

[2]

(ii) Calculate the speed of the motor if the driven pulley is rotating at 890 rpm.

.....

.....

.....

..... [3]

(iii) The vee belt is tensioned by using a lever between the motor and pillar before locking it in place as shown in Fig. 10.5.

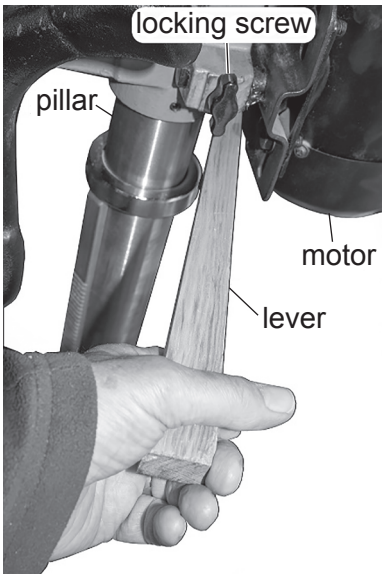

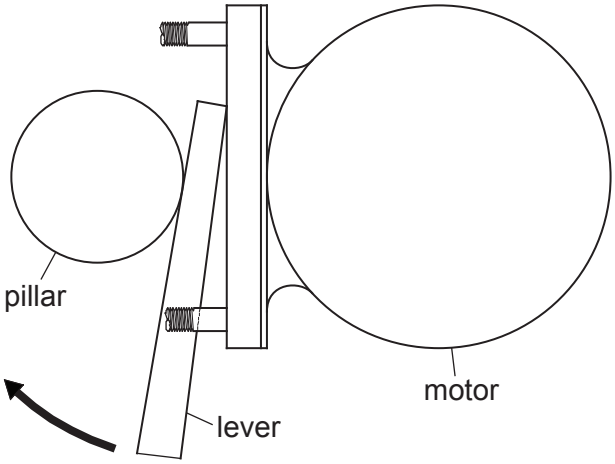

Fig. 10.5

State the order of lever that is used.

..... [1]

(iv) Use sketches and notes to show how the effort applied to the lever, when adjusting the belt, could be reduced.

[2]

(d) Fig. 10.6 shows two gear systems that result in the same reduction of 25:1.

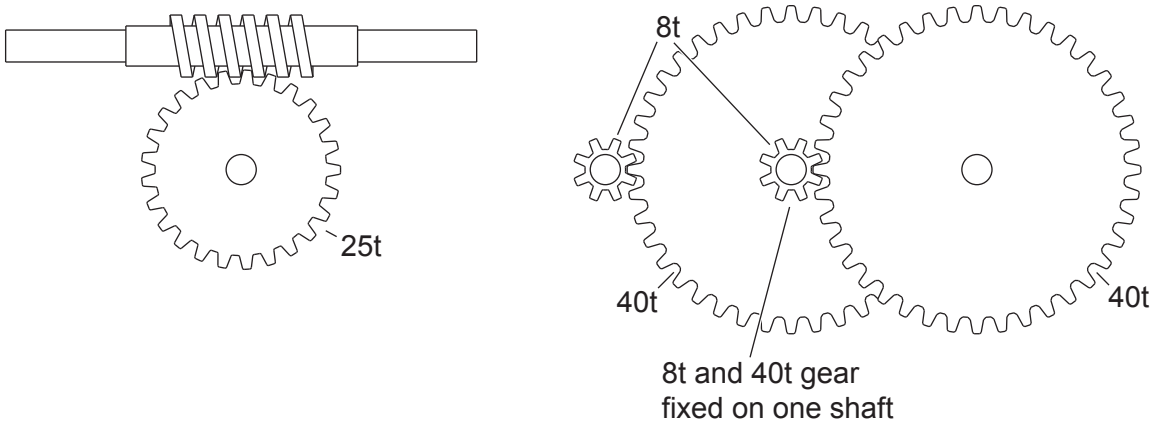

Fig. 10.6

State **two** benefits of using the worm gear arrangement rather than the spur gears.

1 .....

.....

2 .....

.....
[2]

(e) Use the terms given below to complete the methods of converting motion.
Each term may be used once, more than once, or not at all.

rack and pinion

cam and follower

screw thread

crank and slider

compound pulley

Conversion for rotary to linear movement can be carried out using a

..... or a .....

Conversion from rotary to reciprocating movement can be carried out using a

..... or a .....
[4]

11 Fig. 11.1 shows a temperature sensing transducer to be used in a controller for a cooling fan.

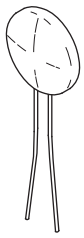

Fig. 11.1

(a) **(i)** State the name of the temperature sensing transducer.

..... [1]

(ii) Fig. 11.2 shows a potential divider circuit that could be used with the temperature sensing transducer. A table of resistance readings for the transducer is shown.

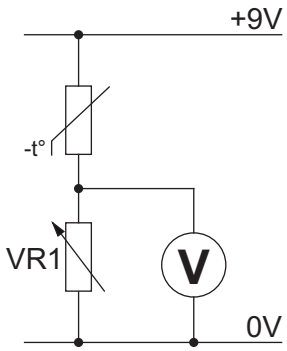

temperature °C	0	5	10	15	20	25	30
resistance kΩ	17.0	13.2	10.1	8.0	6.3	5.0	4.0

Fig. 11.2

Calculate the voltage that would be displayed on the voltmeter when the temperature reaches 20 °C and VR1 is set to 1 kΩ.

Use the formula $V_{out} = V_{in} \times \frac{R_2}{R_1 + R_2}$

.....

.....

.....

..... [3]

(iii) Explain why the signal from the transducer should **not** be connected directly to a logic system.

.....

.....

..... [2]

(iv) Use sketches and notes to show an additional circuit to that shown in Fig. 11.2 that would make the signal from the transducer suitable for connection to a logic system.

[3]

(b) Fig. 11.3 shows the logic system that is used in the controller.
The controller has two inputs:

- The temperature sensing circuit which outputs logic 0 when temperature is too high
- A timing clock to set the 'on' period for the controller with a logic 1 signal.

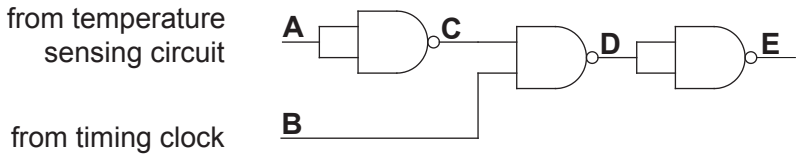

Fig. 11.3

Complete Table 11.1 for the logic system.

Table 11.1

A	B	C	D	E
0	0			
0	1			
1	0			
1	1			

[3]

(c) Fig. 11.4 shows the CMOS IC that will be used in the controller.

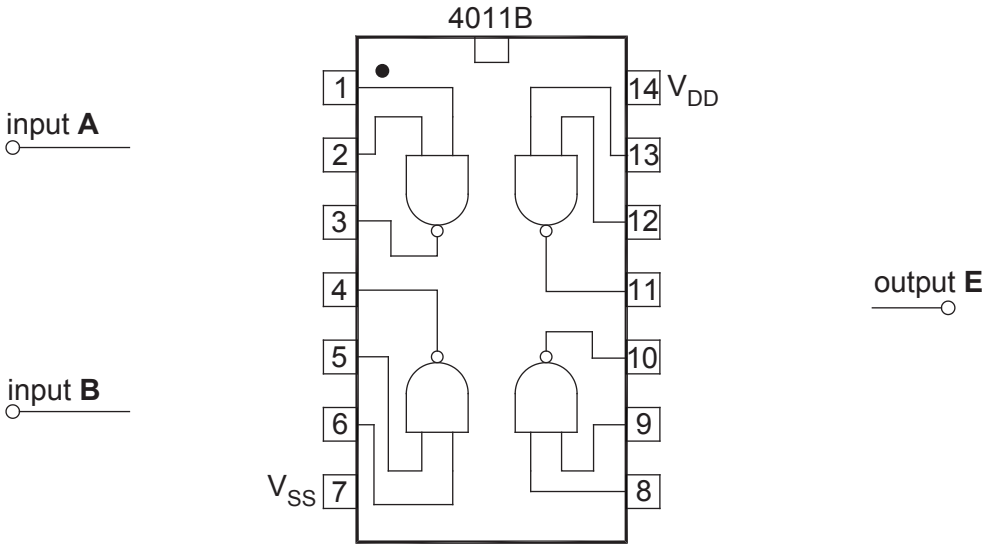

Fig. 11.4

(i) Give a full description of the 4011B IC.

.....

.....

..... [2]

(ii) Complete Fig. 11.4 by adding the connections that would make the logic circuit in Fig. 11.3. [3]

(iii) A 10nF capacitor is added to the circuit connected across the supply pins of the logic IC. Explain the reason for adding the capacitor.

.....

.....

..... [2]

(d) Fig. 11.5 shows the partly completed output circuit of the cooling fan controller.

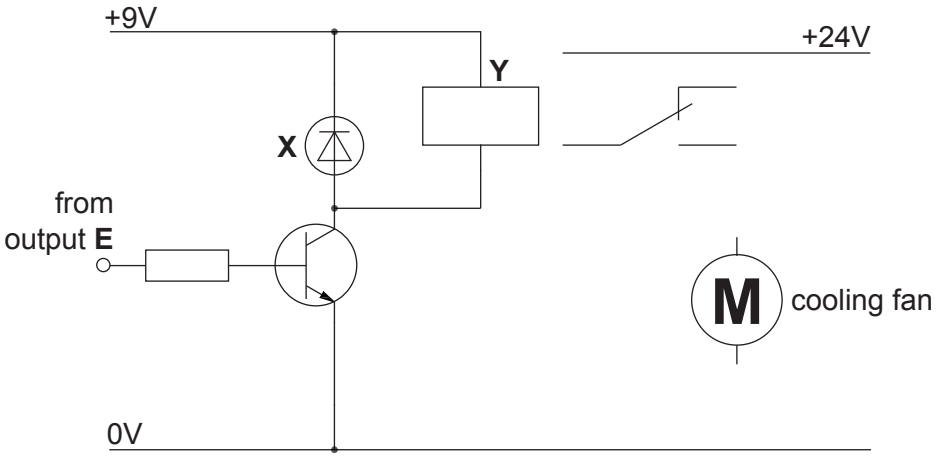

Fig. 11.5

(i) Name components **X** and **Y**.

Component **X** .....

Component **Y** .....
[2]

(ii) Give **two** reasons for using component **Y** in the circuit.

1 .....

.....

2 .....

.....
[2]

(iii) Add the connections on Fig. 11.5 needed to operate the cooling fan. [2]

BLANK PAGE

BLANK PAGE

Permission to reproduce items where third-party owned material protected by copyright is included has been sought and cleared where possible. Every reasonable effort has been made by the publisher (UCLES) to trace copyright holders, but if any items requiring clearance have unwittingly been included, the publisher will be pleased to make amends at the earliest possible opportunity.

To avoid the issue of disclosure of answer-related information to candidates, all copyright acknowledgements are reproduced online in the Cambridge Assessment International Education Copyright Acknowledgements Booklet. This is produced for each series of examinations and is freely available to download at www.cambridgeinternational.org after the live examination series.

Cambridge Assessment International Education is part of Cambridge Assessment. Cambridge Assessment is the brand name of the University of Cambridge Local Examinations Syndicate (UCLES), which is a department of the University of Cambridge.

© UCLES 2022